ITEM	PART NO.	DESCRIPTION	QTY.
1	101002-12	STARTER PLATE CRANK MOUNT REMOVABLE 6 INCH REV-A	1
2	101303-09	ENGINE JAW 6 HOLE	1
3	202007-06	TFX CRANK TRIGGER BRACKETS WITH CRANK SUPPORT WINGS	1
4	352503-06	3/8 AN WASHER	4
5	352505-50	WASHER HT .38 ID .125 THICK .90 DIA	4
6	356337-16	3/8-16 X 1.0 12PT	8
7	204203-01	ADPT CRANK HUB TO ATI DAMPER	1
8	357725-14	HHB 1/4-20 x .875	1
9	202022-20	POINTER RCD FRONT COVER ADJUSTABLE 14 DEG	1
10	357231-16	FHCS-TORX 5/16-24 x 1.0	6
11	202035-05	STAND CRANK SUPPORT 2.95	4
12	356237-40	3/8-24 X 2.50 12PT	6
13	352503-04	1/4 AN WASHER	9
14	356325-16	1/4-20 X 1.0 12PT	8
15	101303-79	ENGINE JAW SPACER .28 TFX-DAMPER	1
16	356937-24	FHCS 3/8-16 X 1.50	4

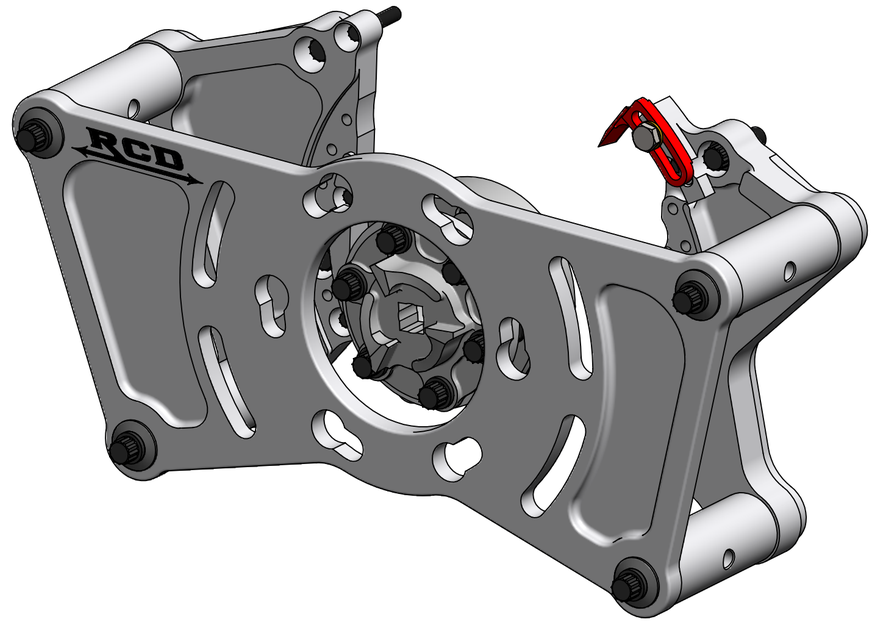

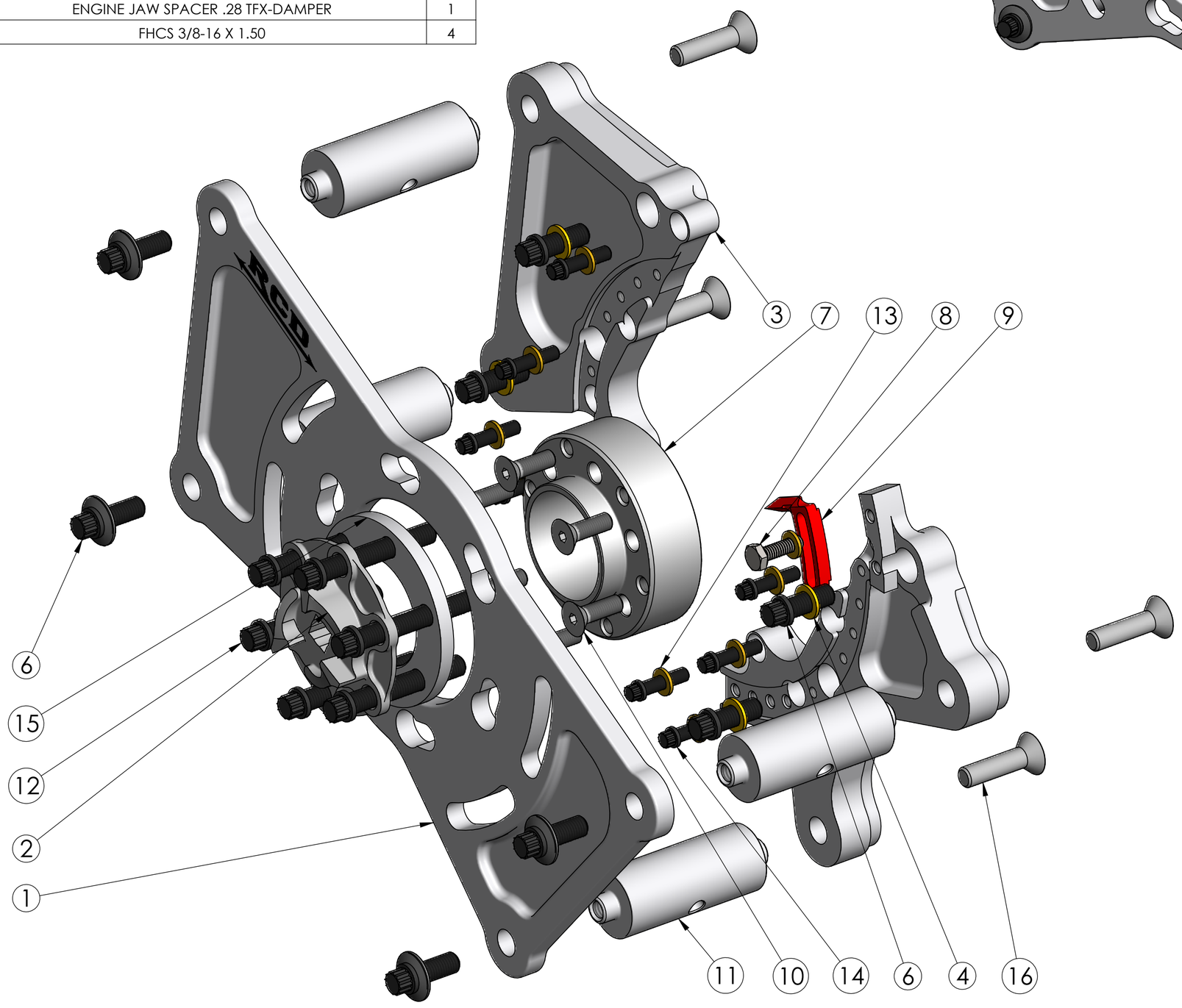

RCD
ENGINEERING INCORPORATED
TEL: 530-292-3133 - FAX: 530-292-3738

REMOVABLE CRANK STARTER DRIVE TFX W-DAMPER-KEYED

PART. NO. 101040-0048 | C | SHEET 1 OF 1